Operating instructions

fimotec – fischer
Montagetechnik

Frequency control devices FS-26 for vibratory conveyors

Art. no.: 90.0210.60

fimotec-fischer GmbH & Co. KG
Friedhofstraße 13
D -78588 Denkingen

Tel: +49 (0)74 24 - 88 4-0
Fax: +49 (0)74 24 - 88 4-50

E-mail: post@fimotec.de
Internet: www.fimotec.de

In your own interest:
Please read these instructions and keep them in a safe place.
Please observe and follow the safety information.

Contact

fimotec-fischer GmbH & Co. KG
Friedhofstr. 13
D -78588 Denkingen

Tel.: +49 7424 884 0
Fax: +49 7424 884 50
E-Mail: post@fimotec.de
Web: wwwfimotec.de

Provisos

Table of contents

1 General

In this manual, you will find all important information regarding the mounting, connection, setting and operation of your FS 26 device.
In addition, you will find information as well as important warnings for your safety.
Please observe:
Devices of the FS 26 series are specially adapted frequency converters for the actuation of vibratory conveyors. The devices generate a mains-independent output frequency for the vibratory conveyor. An exact tuning of the vibratory conveyor is therefore not required. The vibratory conveyor has smooth running behavior due to the sinusoidal output current. The set vibration frequency on the control device generates twice the vibration frequency on the vibratory conveyor. The optimal vibration frequency for the transported material is set manually.

1.1 The product

- Frequency converter with output voltage stabilization
- Mains frequency-independent, adjustable output frequency
- Can be used for mains voltages from 95 - 250 V~ 50 or 60 Hz
- Umin and Umax limits of the output voltage can be set separately and independently of one another
- Adjustable current limit for maximum solenoid current
- Soft start / soft stop can be adjusted separately
- Analog setpoint setting
- Vibration amplitude readjustment
- Backup copy of work parameters and factory settings can be called up
- Selectable vibration frequency, full-wave or half-wave (intermediate wave hidden)
- Switchable via control signal of PLC or with a sensor or potential-free contact
- Temperature monitoring of power output stage
- Display of all values in original units V~; A~; T°C; Hz; V-; mA-; Time s
- Three control inputs and two 24V= outputs are available

1.2 Guide for these instructions

Used signal words and symbols

Symbol	Signal word	Meaning
	Danger	Warning of potentially serious to fatal injuries The lightning symbol warns against dangers due to electrical current.
	Warning	Warning of potentially minor injuries or potential damage to property
	Caution	Warning of potential defects / destruction of the device
	Important note **Important tip**	Here, important information or a tip is given concerning the function.

1.3 Safety-related information for the user

These instructions contain the required information for the intended use of the device described herein. They are directed toward technically qualified personnel.

Qualified personnel are people who have been authorized by persons responsible for the safety of the system to execute the required activities and are able to recognize potential dangers and avoid them based on their training, experience and instruction, as well as their knowledge of relevant standards, regulations, accident prevention regulations and operating conditions (definition of skilled personnel according to IEC 364).

Caution: Danger due to electric voltage.
Non-observance can lead to death, serious bodily injury or property damage.

The following safety information is for your protection, the protection of third parties as well as the protection of the device. You should therefore observe it under all circumstances.

- Disconnect the power supply before installation or dismantling work, as well as when changing a fuse or making changes to the setup.
- Observe the valid accident prevention and safety regulations for your specific application.
- Before commissioning, check whether the nominal voltage of the device agrees with the local mains voltage.
- Emergency Stop mechanisms must remain active in all operating modes. Unlocking the Emergency Stop mechanism must not result in uncontrolled reactivation.
- The electrical connections must be covered.
- Protective conductor connections must be checked for perfect function after installation.

Operating environment

The device must not come into direct contact with water.
When changing from cold to warm environments, allow the device to temper for a few hours before putting it into operation; otherwise, damage could occur due to condensation water.
Do not install the control device near devices which generate strong electromagnetic fields. The function could be disturbed as a result.
Also avoid environments which are very hot, cold or wet.

Power supply

Only connect the device to a grounded mains socket with a mains voltage of 95-253 V~/50 Hz or 95-253V~/60 Hz.
If you notice malfunctions, disconnect the device from the mains. Have the device checked by qualified, skilled personnel, and have it repaired if necessary.

The device

For safety and licensing reasons (CE), it is not permitted to convert and/or modify the device without authorization.
The device meets the valid low-voltage and EMC directive.

Operation

The control device only functions correctly when it is correctly installed and operated. In the event of malfunctions or unclear operating states, you should check the device and remedy the malfunction (see "Error list" chapter) or have it remedied.

- To avoid the risk of injury, do not allow uninstructed personnel or other vulnerable/endangered persons to operate the device without supervision.

Warning:

For applications requiring constant switching ON and OFF of the vibratory conveyor device (e.g., accumulation shutdown, hopper control, etc.), the control input intended for this must be used.
If the load current circuit is interrupted via a switch or relay, the control device could be damaged.

If the control device is switched on, the device plug on the operated vibratory conveyor device may never be plugged in or unplugged. The control device might be damaged as a result.

Parameters which are in the menu structure but are not described in these instructions represent spaceholders which either have no function or are not yet meant for use in the current version. Therefore, avoid activating these menu items or contact Support.

1.4 Intended use

The device described here is an electrical piece of equipment for use in industrial systems.
It is designed to control vibratory conveyors.
A use other than the one described above is improper and can result in injuries as well as property damage.

(Further information about this topic can be found in the "Safety information" chapter).

2 Application

The electronic frequency converter FS 26 is used for the infinitely variable control of inductive loads, such as spiral conveyors, linear conveyors and hoppers.

The device works according to the principle of pulse width modulation within the half-waves with adjustable periods of 5 - 200 Hz; the conveying capacity is adjusted by adjusting the magnet voltage via the membrane keypad embedded in the housing cover or alternatively selectable via 0-10 V DC, 4-20 mA or an external 10 kOhm potentiometer in the range of 1V~ up to the maximum output voltage. By limiting the upper and lower setpoint limits, the optimal specified range can be moved along via the setpoint.

The amplitude of the sinusoidal output current (upper half-wave) depends on the set period and is therefore constant. The vibration frequency is set via the keypad as standard.

After switching on the mains voltage, the integrated, adjustable soft start is started and ensures the output voltage starts up jerk-free up to the set voltage value. A limiter stage limits the load current of the capacitors to 6 A in the moment of switch-on. Possible switch-on peaks are minimized this way. Furthermore, both the soft start as well as the soft stop when the output voltage is switched on/off are activated via the control input and are for increasing and decreasing the conveying capacity with time control so that ordered bulk material does not change its position again. Both times can be adjusted separately.

The control inputs allow the device to be switched on and off by another system (PLC, initiator, sensors, etc.). The control device therefore provides its own supply voltage of +24 V DC. Switching on or off via an external voltage of + 24 V DC is also possible.

Via the additionally integrated 24V= outputs, external devices can be operated of controlled, depending on the logic specification.

The device provides an input for connecting an acceleration sensor for readjusting the output voltage.

Note

By determining the mains voltage and output current, changes are registered immediately and compensated for by a controller stage, i.e. the output voltage remains stable. This way, the bulk material is guaranteed to run smoothly.

Tip

On the control device, small magnets can also be safely operated.

3 Installation

A bore and elongated hole, externally accessible in the center of the device axis, are available for fastening the device. These are separated from the device interior.

Important note

Fasten the device to a vibration-free surface.

Caution:

Please make sure that the ribbon cable and control cable are not pinched against the housing in the interior. Pinching can cause short circuits and the destruction of the device.

Important note

The connection cable to the drive must be shielded.

Warning:

Procedure for high voltage test:

- **L and N must be connected with each other.**
- **Test voltage may not be higher than 1000 V AC.**
- **Every device must be tested separately.**

If the above criteria are not complied with, the device could be damaged and the warranty will be void.

Caution:

The cover of the device is made of plastic. Screwing on the cover with the 6 countersunk screws must not be done with force, since otherwise there is a risk of the plastic cracking.
Screw in screws with a commercially available screwdriver by hand until the screw is flush with the recess and the cover lies on the profile.

3.1 Overview and dimensions

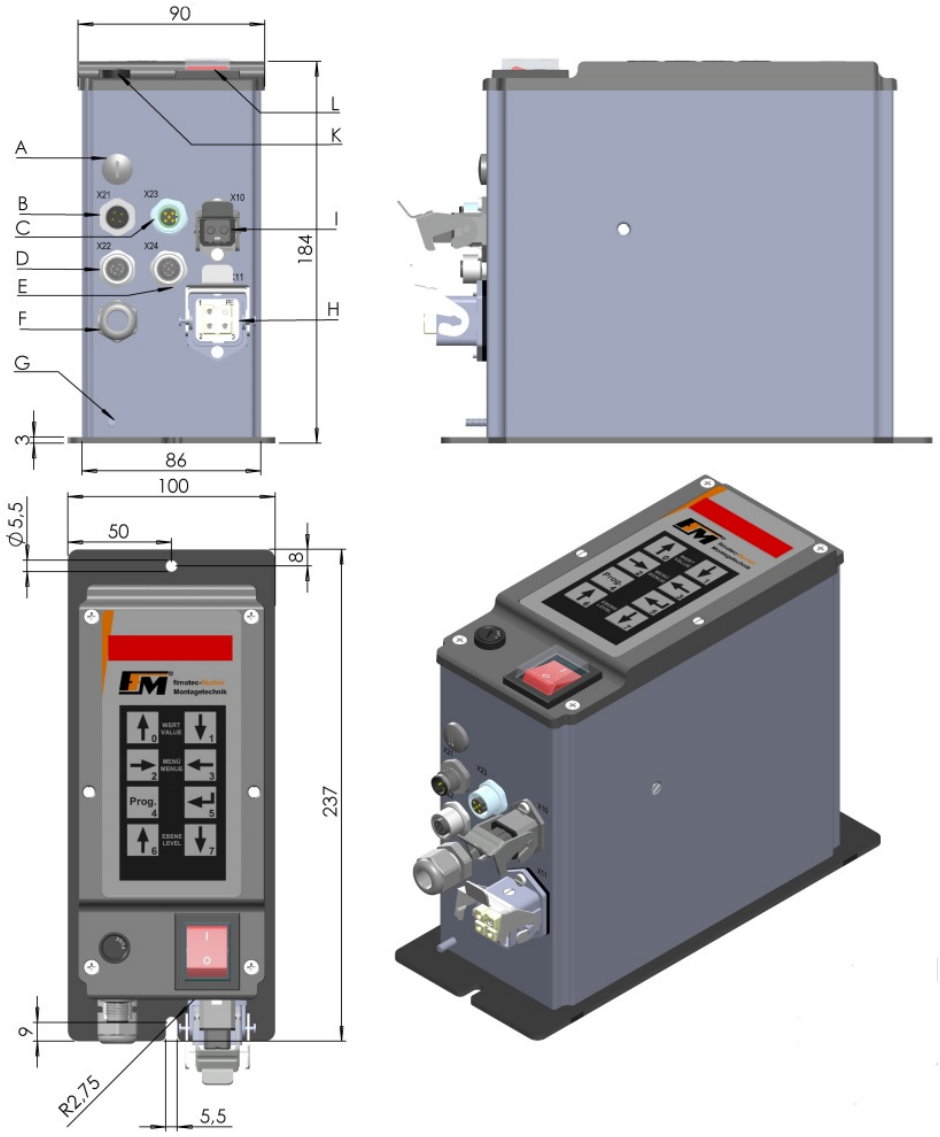

A - M12x1.5 Blind plug
B - M12 plug, 4-pin, for enable input connection (E1) – X21
C - M12 socket, 4-pin, b-coded, for status output connection (T1) – X23
D - M12 socket, 4-pin, for sensor input connections (E2+E3) – X22
S - M12 socket, 4-pin, for vibration amplitude sensor connection + valve (T2)-X24
F - Mains supply line
G - Grounding bolt
H - Vibratory conveyor connection 3+PE
I - Mains voltage connection via STAKEI20
K - Mains fuse
L - Mains switch

3.2 Connections / operating elements of control boards

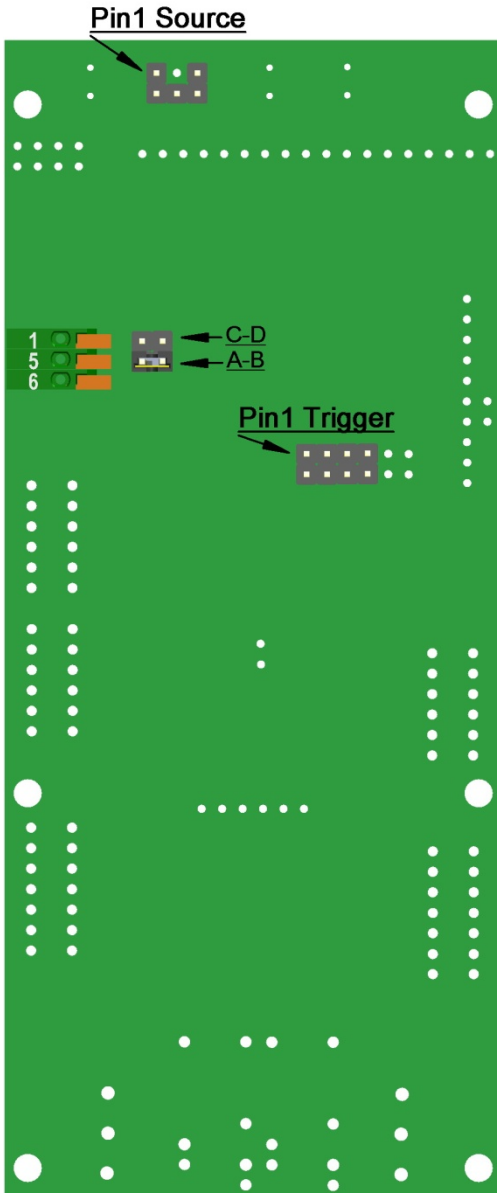

3.3 Housing connections

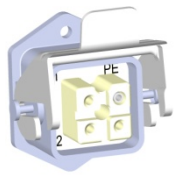	Vibratory conveyor connection Pin 1 - Load Pin 2 - Load Pin 3 - Not Connected PE - Protective conductor
	Mains voltage connection Pin 1 - L Pin 2 - N PE - Protective conductor

 X21	<u>Control input connection E1</u> Pin 1 - 24V= Pin 2 - Not Connected Pin 3 - GND Pin 4 - Enable input (menu: E1)
 X23	<u>Status output connection T1 (b-coded)</u> Pin 1 - Not Connected Pin 2 - Not Connected Pin 3 - GND Pin 4 - Output (menu: A1)
 X22	<u>Sensor input connection E2+E3</u> Pin 1 - +24 V= Pin 2 – Sensor input 2 (menu: E3) Pin 3 - GND Pin 4 - Sensor input 1 (menu: E2)
 X24	<u>Vibration sensor connection + valve output T2</u> Pin 1 - +24 V= Pin 2 - Valve output (menu: A2) Pin 3 - GND Pin 4 - Vibration amplitude input The +24V= supply is isolated from the mains voltage.

4 Commissioning

Before connecting the device, the mains voltage and frequency must be determined. The data must lie in the range of permissible values for the device.

- Check and set the jumpers according to the control type.
- Connect the vibratory conveyor and control cable to the control device.
- Stick the mains plug of the control device in the socket.
- Switch on the control device.
- Via the keypad, define the Umin and Umax limits of the required output voltage range.
- Via the keypad for the soft start and soft stop, define the characteristics for switching the control input on and off.

Operating note

Before switching on, check to make sure the plug connections are correct.
Switch on the control device with the mains switch.
Set the setpoint via the keypad in the cover until the vibratory conveyor reaches the desired conveying capacity.

Warning:

All parts of the vibration drive must be grounded (magnet and armature).
Vibration drives with plastic springs are to be checked then.

4.1 Control panel

The device is operated/set via 8 keys which are located on a control panel on the cover, together with a 6 x7-segment LED display.
All operating mode settings as well as the settable parameters can be made via this control panel.

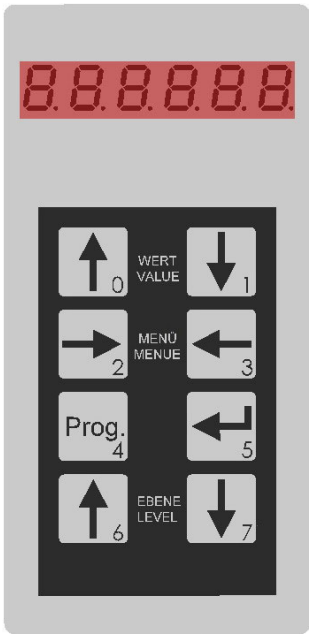

VALUE KEYS 0 and 1
MENU KEYS 2 and 3
PROGRAMMING KEY 4
SAVE KEY 5
LEVEL KEYS 6 and 7

Operating note: Power output ON/OFF

By simultaneously pressing the 6 and 7 keys, the device can be switched on/off; thereby, however, there is no disconnection from the mains; the power semiconductors are merely disabled.

Display
0StArt or 0StoP

Operating note: Jump to amplitude display

By simultaneously pressing the 2 and 3 keys, the "Amplitude" root display is called up.

Display
0A 888

Operating note: Error status query

If an error is registered, the display starts to flash. By pressing the 0 or 1 key, the error will be shown.

Display (example)
dErr 4

Operating note: Show software version and revision

By simultaneously pressing the 4 and 5 keys and keeping them pressed, the software number and revision date will be displayed in succession.

Display (example)
c 310 -> 070711 -> P 40.15

Keypad explanation

The parameters are set by means of a menu structure and by entering an operator code.
In the "Setting instructions", the menu structure and the setting ranges of the parameters, as well as the function programming, will be explained.

By briefly pressing the arrow key 0 (increase/change) or 1 (decrease/change), the value in the selected parameter is increased/reduced or changed by one position (ones, tenths or mode). If the one or other key is kept pressed, it switches to fast mode, and after approx. 1 s to 2x fast mode.

If arrow keys 2 (clockwise rotation) and 3 (counterclockwise rotation) are briefly pressed, it switches from one parameter to the next. If the one or other key is kept pressed, the parameters are rolled through.

By briefly pressing the arrow keys 6 (increase) and 7 (decrease), the level structure is changed from one level to the other. If the one or other key is kept pressed, the levels are rolled through.

When the 4 key is pressed in the "Amplitude" root display, programming mode is switched to <u>without</u> entering an operator code. The amplitude can now be changed with the 0 and 1 keys.

If the 4 key is pressed in all other parameters, the entry of an operator code is expected. CodE -> .
After entering the code, this must be confirmed with the 5 key. If the code is correct, programming mode is switched to. Depending on the access authorization (different codes are available for this; see the "Operator codes" chapter), parameter items can be changed accordingly.

After completing the changes, these must be stored with the 5 key.
0 SAuE appears briefly.

! If the 5 key is not pressed, changes will be discarded one minute (timeout) after the last key was pressed;
the values before changing to programming mode will be restored.

Exiting programming mode through "timeout" is indicated by the flashing of the programming dot in the second LED from the left. The dot flashes 3x before programming mode is exited.

Programming mode can be exited sooner by pressing the 4 key again without saving.

Programming mode is indicated by the dot in the second LED from the left.
0A. 888

! **Security query**
For some parameters, before executing the function "Read" or "Save", there is a security query 0 SurE
To confirm, the 5 key must be pressed again. To exit without executing the function, the keys 0 - 1 - 2 - 3 - 4 - 6 - 7 can be pressed.

Procedure example:

Select level via 6 and 7 keys.
Select parameter via 2 and 3 keys.
Press the 4 key to get into programming mode.
Enter the operator code (except for the "Amplitude" parameter), A or B.
Press the 5 key to confirm the code.
Change the parameter value with the 0 and 1 keys.
Save the value with the 5 key.
Alternatively, exit programming mode without saving by pressing the 4 key.

4.2 Menu structure

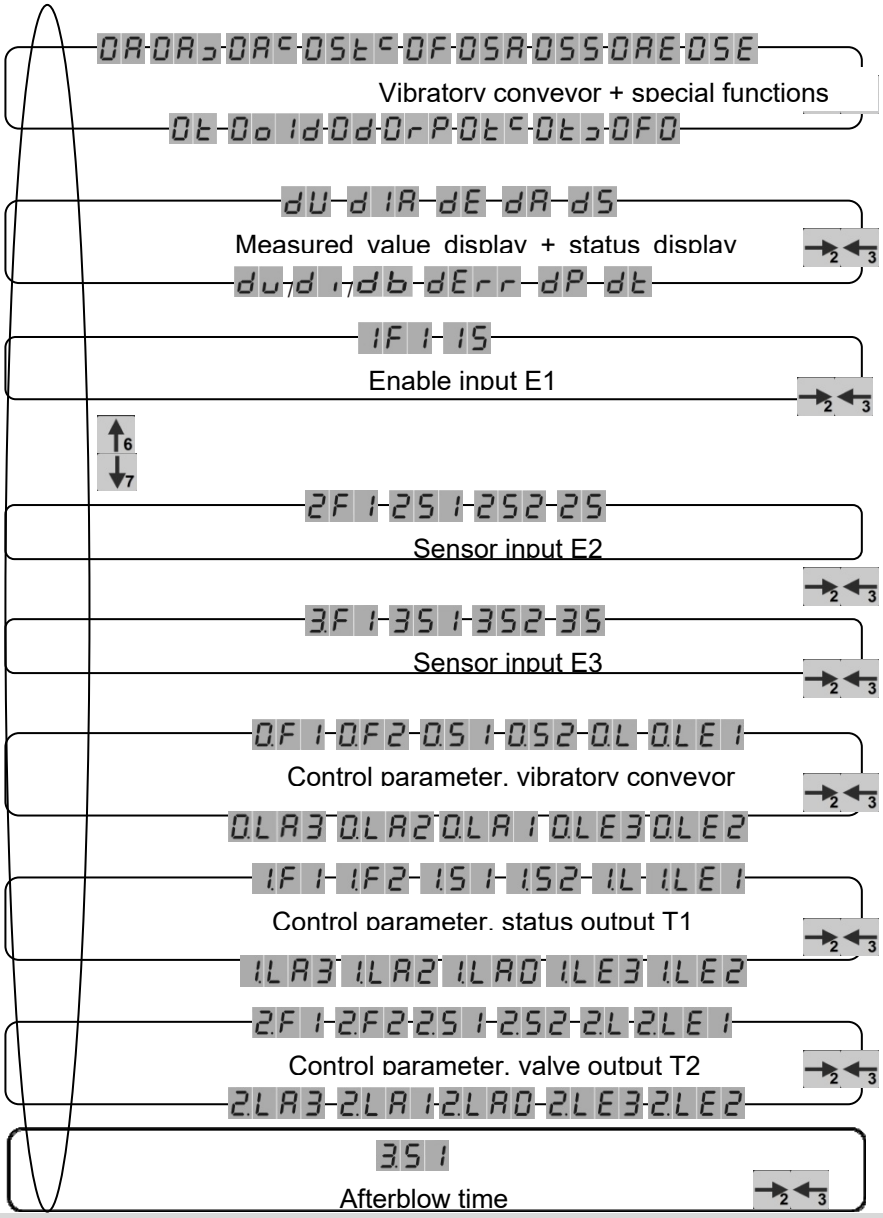

4.3 LEVEL 0 - Performance parameter, vibratory conveyor drive

After power ON, the display switches to the "Amplitude" root display. Depending on this, the 2 and 3 keys can be used to roll to every individual parameter on this level. The following parameters are available:

Parameter: Amplitude [V~]
Without code — Value can be set from 1 - 230 max.
Increment 1 V~
Max. voltage depends on mains voltage range.

Parameter: min. amplitude limit [V~]
Code B — Value can be set from 1 - 230, depending on the mains voltage range
Increment 1 V~
Limited by max. amplitude limit

Parameter: max. amplitude limit [V~]
Code B — Value can be set from 1 - 230, depending on the mains voltage range
Increment 1 V~
Limited by min. amplitude limit

Parameter: Current limit [A~] for vibratory conveyor
Code B — Value can be set from 0.1 - 6.0
Increment 0.1 A~
To protect the magnets, value is set to the max. permissible current of all connected magnets.

Parameter: Frequency [Hz]
Code B — Value can be set from 5.0 - 99.9 / 100 - 200
Increment 0.1 Hz, then starting from 100 Hz, increment is 1 Hz
The specified frequency is equivalent to the mains frequency, i.e. 50 Hz set corresponds to the mains frequency of 50 Hz -> 6000 oscillations per minute.
Mech. vibrations per minute = frequency x 60 x 2

Parameter: Soft start [s]
Code A and B — Value can be set from 0.1 - 5.0
Increment 0.1 s
Voltage ramp from 0V~ to the set amplitude within the set time.

Parameter: Soft stop [s]
Code A and B — Value can be set from 0.1 - 5.0
Increment 0.1 s
Voltage ramp from set amplitude to 0V~ within the set time.

Parameter: Setpoint specification [function]

Code A and B

Value can be set to F, I, P, U, b

F - Setpoint specified via membrane keypad
I - Setpoint specified via analog current 4 - 20 mA=
P - Setpoint specified via potentiometer 10K
U - Setpoint specified via analog voltage 0 - 10 V=
b - Setpoint specified via acceleration sensor

Parameter: Acceleration sensor selection

Code B

Visible after code input

Value can be set to 0, U, I

0 - No acceleration sensor connected
U - Acceleration sensor connected to voltage output
I - Acceleration sensor connected to current output

If a sensor type is activated, the menu for the setpoint specification is supplemented with menu item b. Setpoint specification for acceleration sensor.

Parameter: Wave form selection [function]

Code B

Value can be set to G, H

G - Full-wave ^^^^^^
H - Half-wave ^ ^ ^ (only every other oscillation is output)

Parameter: min. acceleration limit [g]

Code B

Value can be set to 0.0 - 20.0

Visible after code input, increment 0.1 g

Lower value in readjustment range

Parameter: max. acceleration limit [g]

Code B

Value can be set to 0.0 - 20.0

Visible after code input, increment 0.1 g

Upper value in readjustment range

Control parameter: Proportional component (closed-loop gain)

Code B

Value can be set to 0.1 - 19.9

Visible after code input, increment 0.1

Default 5.0

Parameter: Control selection [function]

Code A and B

Value can be set to 0, 1, E

0 - Drive permanently OFF
1 - Driver permanently ON
E - Drive is controlled via logic level 0.

Parameter: Parameter backup [function]

Code A and B Value can be set to 0, bs, br, rE

0 - No function
bs - Save backup parameters
br - Load backup parameters
rE - Load factory settings

Parameter: Nominal acceleration [g]

Code A and B Value can be set from 0.0 - 20.0

Increment 0.1 g

The current acceleration value is accepted by pressing the 0 and 1 keys simultaneosly in programming mode.

4.4 LEVEL d - Information output (display only)

After power ON, the display switches to the "Amplitude" root display. From here, the 6 key can be used to change to level d. The following values and status displays are available:

Value: Mains voltage [V~]
The currently applied mains voltage is displayed.

Value: Output current [A~]
The currently flowing magnet current is displayed.

Status display: Inputs E1 - E6, depending on availability
Upper row of lines outputs the physical status,
i.e. if 24V= is applied to the corresponding input,
a line is output.
24V= at E2 - Line appears in upper row, pos. 2 from left

Lower row of lines outputs the logical status, i.e. after
processing the inversion and times.
0V= at E1 and F1=S - Line appears in lower row, pos. 1 from the left

Status display: Outputs A0 - A7, depending on availability
Upper row of lines outputs the physical status,
i.e. if there is voltage applied at the corresponding output,
a line is output.
24V= at A1 - Line appears in upper row, pos. 2 from the left

Lower row of lines outputs the logical status, i.e.
corresponding to the logical input/output operation and
after processing the inversions and times.
24V= at A2 and F2=S - Line appears in lower row, pos. 3 from the left

Status display: Inputs and outputs, depending on availability
Upper row of lines outputs the physical status of the inputs,
i.e. if voltage is applied at the corresponding input,
a line is output.
Lower row of lines outputs the physical status of the
outputs, i.e. if voltage is applied to the corresponding output,
a line is output

Value: Temperature [°C]
The temperature on the power output stage is output.
Values up to 110 are permissible.

Display of the program version

Error number is displayed.

Value of applied analog voltage [V=]

or

Value of applied analog current [mA=]

or

Value of current acceleration [g]

Depending on the programmed setpoint specification (parameter AE), the applied analog value is displayed here.

4.5 LEVEL 1 - Enable input E1

After power ON, the display switches to the "Amplitude" root display.
From here, the 6 key (press 2x) can be used to change to level 1. The following parameters are available:

A logical 1 causes a reaction.
A logical 0 causes no reaction.

Code A and B

Parameter: F1 [function]
Value can be set to O, S
O - Applied HI signal is not inverted and is further processed as logical 1.

Applied LO signal is not inverted and is further processed as logical 0.

S - Applied HI signal is inverted and is further processed as logical 0.
Applied LO signal is inverted and is further processed as logical 1.

Code A and B

Parameter: Debouncing time S [ms]
Value can be set from 0.1 - 99.9
Increment 0.1 ms
If level changes are occurring very quickly in succession, double pulses can be hidden via the debouncing time.

Via input E1, all outputs are deactivated or enabled at the outputs, overriding the programmed logic.

4.6 LEVEL 2 - Sensor input E2

After power ON, the display switches to the "Amplitude" root display.
From here, the 6 key (press 3x) can be used to change to level 2. The following parameters are available:

A logical 1 causes a reaction.
A logical 0 causes no reaction.

Code A and B

Parameter: F1 [function]
Value can be set to O, S
O - Applied HI signal is not inverted and is further processed as logical 1.
Applied LO signal is not inverted and is further processed as logical 0.

S - Applied HI signal is inverted and is further processed as logical 0.
Applied LO signal is inverted and is further processed as logical 1.

Code A and B

Parameter: Dropout delay S1 [s]
Value can be set from 0.0 - 99.9
Increment 0.1 s
There is a logical result, depending on the inversion. If the logical result is 1, the output is switched off with a delay by the time S1.

Code A and B

Parameter: Pick-up delay S2 [s]
Value can be set from 0.0 - 99.9
Increment 0.1 s
There is a logical result, depending on the inversion.
If the logical result is 0, the output is activated with a delay by the time S2.

Code A and B

Parameter: Debouncing time S [ms]
Value can be set from 0.1 - 99.9
Increment 0.1 ms

If level changes are occurring very quickly in succession, double pulses can be hidden via the debouncing time.

4.7 LEVEL 3 - Sensor input E3

After power ON, the display switches to the "Amplitude" root display.
From here, the 6 key (press 4x) can be used to change to level 3. The following parameters are available:

A logical 1 causes a reaction.
A logical 0 causes no reaction.

Code A and B

Parameter: F1 [function]
Value can be set to O, S
O - Applied HI signal is not inverted and is further processed as logical 1.
Applied LO signal is not inverted and is further processed as logical 0.

S - Applied HI signal is inverted and is further processed as logical 0.
Applied LO signal is inverted and is further processed as logical 1.

Code A and B

Parameter: Dropout delay S1 [s]
Value can be set from 0.0 - 99.9
Increment 0.1 s
There is a logical result, depending on the inversion.
If the logical result is 1, the output is deactivated, delayed by the time S1.

Code A and B

Parameter: Pick-up delay S2 [s]
Value can be set from 0.0 - 99.9
Increment 0.1 s
There is a logical result, depending on the inversion.
If the logical result is 0, the output is activated with a delay by the time S2.

Code A and B

Parameter: Debouncing time S [ms]
Value can be set from 0.1 - 99.9
Increment 0.1 ms
If level changes are occurring very quickly in succession, double pulses can be hidden via the

debouncing time.

4.8 LEVEL 0. - Logic, vibratory conveyor drive

After power ON, the display switches to the "Amplitude" root display.
From here, the 6 key (press 5x) can be used to change to level 0.

On level 0, the control of the vibratory conveyor (physical) and the feedback of the vibratory conveyor status (logical) are defined and set. The feedback is available as another signal to be processed (comparable to an external control signal) in any other outputs (this way, functions, such as delayed blast air, can be easily realized).

The following parameters are available:

A logical 1 causes a reaction.
A logical 0 causes no reaction.

Code A and B

Parameter: F1 [function]
Value can be set to O, S
Function has a direct influence on the physical state of the vibratory conveyor (inversion of the state).
O - Applied HI signal is not inverted and is further processed as logical 1.
Applied LO signal is not inverted and is further processed as logical 0.

S - Applied HI signal is inverted and is further processed as logical 0.
Applied LO signal is inverted and is further processed as logical 1.

Code A and B

Parameter: F2 [function]
Value can be set to O, S
Function has a direct influence on the logical state of the vibratory conveyor to be further processed (inversion of the logical state).
O - Applied HI signal is not inverted and is further processed as logical 1.
Applied LO signal is not inverted and is further processed as logical 0.

S - Applied HI signal is inverted and is further processed as logical 0.
Applied LO signal is inverted and is further processed as logical 1.

Code A and B

Parameter: Dropout delay S1 [s]
Value can be set from 0.0 - 9.9
Increment 0.1 s
Depending on the physical state of the vibratory conveyor and the inversion by F2, a logical result is output.
If the logical result is 1, the logically further processable state (feedback) is passed on as 1, delayed by the time S1.Otherwise, the state remains as is.

Code A and B

Parameter: Pick-up delay S2 [s]
Value can be set from 0.0 - 9.9
Increment 0.1 s
Depending on the physical state of the vibratory conveyor and the inversion by F2, a logical result is output.
If the logical result is 0, the logically further processable state (feedback) is passed on as 0, delayed by the time S2.Otherwise, the state remains as is.

Code A and B

Parameter: Logic [function]
Value can be set to O, U, S
Result = physical state of the vibratory conveyor before the function F1 .
O - OR operation of all available and active
(value entry 0.LEX=1) inputs and active (0.LAX=1) outputs
(feedback)

U - AND operation of all available and active
(value entry 0.LEX=1) inputs and active (0.LAX=1) outputs
(feedback)

S - ACCUMULATION operation of all available and active
(value entry 0.LEX=1) inputs and active (0.LAX=1) outputs
(feedback)
AND operation to switch off
OR operation to switch on again

Code A and B

Parameter: Input E2 [function]
Value can be set to 0 or 1
0 - Input switched to inactive (not considered in the logic)
1 - Input switched to active (considered in the logic)

Code A and B

Parameter: Input E3 [function]
Value can be set to 0 or 1
0 - Input switched to inactive (not considered in the logic)
1 - Input switched to active (considered in the logic)

Code A and B

Parameter: Output A1 [function]
Value can be set to 0 or 1
0 - Output switched to inactive (not considered in the logic)
1 - Output switched to active (considered in the logic)

Code A and B

Parameter: Output A2 [function]
Value can be set to 0 or 1
0 - Output switched to inactive (not considered in the logic)
1 - Output switched to active (considered in the logic)

Code A und B

Parameter Output A3 [funktion]
Value can be set to 0 or 1
0 - Output switched to inactive (not considered in the logic)
1 - Output switched to active (considered in the logic)

Function example:

Drive is switched via sensor input E2

-> Activation (1) of parameter 0.LE2

4.9 LEVEL 1. - Logic, transistor output

After power ON, the display switches to the "Amplitude" root display.
From here, the 6 key (press 6x) can be used to change to level 1.

On level 1, the control of the transistor output (physical) and the feedback of the transistor output status (logical) are defined and set. The feedback is available as another signal to be processed (comparable to an external control signal) in any other outputs (this way, complex control functions can be easily realized).

The following parameters are available:

A logical 1 causes a reaction.
A logical 0 causes no reaction.

Code A and B

Parameter: F1 [function]
Value can be set to O, S
Function has a direct influence on the physical state of the
Transistor output (inversion of the state)
O - Applied HI signal is not inverted and is further processed as logical 1.
Applied LO signal is not inverted and is further processed as logical 0.

S - Applied HI signal is inverted and is further processed as logical 0.
Applied LO signal is inverted and is further processed as logical 1.

Code A and B

Parameter: F2 [function]
Value can be set to O, S
Function has a direct influence on the logically further processable state of the transistor output (inversion of the logical state).
O - Applied HI signal is not inverted and is further processed as logical 1.
Applied LO signal is not inverted and is further processed as logical 0.

S - Applied HI signal is inverted and is further processed as logical 0.
Applied LO signal is inverted and is further processed as logical 1.

Code A and B

Parameter: Dropout delay S1 [s]
Value can be set from 0.0 - 9.9
Increment 0.1 s
Depending on the physical state of the transistor output and the inversion by F2, a logical result is output.
If the logical result is 1, the logically further processable state (feedback) is passed on as 1, delayed by the time S1.
Otherwise, the state remains as is.

Code A and B

Parameter: Pick-up delay S2 [s]
Value can be set from 0.0 - 9.9
Increment 0.1 s
Depending on the physical state of the transistor output and the inversion by F2, a logical result is output.
If the logical result is 0, the logically further processable state (feedback) is passed on as 0, delayed by the time S2.
Otherwise, the state remains as is.

Code A and B

Parameter: Logic [function]
Value can be set to O, U, S
Result = physical state of the transistor output before the function F1.

O - OR operation of all available
and active (value entry 0.LEX=1) inputs and active (0.LAX=1) outputs (feedback)

U - AND operation of all available
and active (value entry 0.LEX=1) inputs and active (0.LAX=1) outputs (feedback)

S - ACCUMULATION operation of all available
and active (value entry 0.LEX=1) inputs and active (0.LAX=1) outputs (feedback)
AND operation to switch off
OR operation to switch on again

Code A and B

Parameter: Input E2 [function]
Value can be set to 0 or 1
0 - Input switched to inactive (not considered in the logic)
1 - Input switched to active (considered in the logic)

Code A and B

Parameter: Input E3 [function]
Value can be set to 0 or 1
0 - Input switched to inactive (not considered in the logic)
1 - Input switched to active (considered in the logic)

Code A and B

Parameter: Input A0 [function]
Value can be set to 0 or 1
0 - Input switched to inactive (not considered in the logic)
1 - Input switched to active (considered in the logic)

Code A and B

Parameter: Input A2 [function]
Value can be set to 0 or 1
0 - Input switched to inactive (not considered in the logic)
1 - Input switched to active (considered in the logic)

Code A und B

Parameter Input A3 [function]
Value can be set to 0 or 1
0 - Input switched to inactive (not considered in the logic)
1 - Input switched to active (considered in the logic)

4.10 LEVEL 2. - Logic, transistor output

After power ON, the display switches to the "Amplitude" root display.
From here, the 6 key (press 7x) can be used to change to level 2.

On level 2, the control of the transistor output (physical) and the feedback of its status (logical) are defined and set. The feedback is available as another signal to be processed (comparable to an external control signal) in any other outputs (this way, complex control functions can be easily realized).

The following parameters are available:

A logical 1 causes a reaction.
A logical 0 causes no reaction.

Code A and B

Parameter: F1 [function]
Value can be set to O, S
Function has a direct influence on the physical state of the transistor output (inversion of the state).
O - Applied HI signal is not inverted and is further processed as logical 1.
Applied LO signal is not inverted and is further processed as logical 0.

S - Applied HI signal is inverted and is further processed as logical 0.
Applied LO signal is inverted and is further processed as logical 1.

Code A and B

Parameter: F2 [function]
Value can be set to O, S
Function has a direct influence on the logically further processable state of the transistor output (inversion of the logical state).
O - Applied HI signal is not inverted and is further processed as logical 1.
Applied LO signal is not inverted and is further processed as logical 0.

S - Applied HI signal is inverted and is further processed as logical 0.
Applied LO signal is inverted and is further processed as logical 1.

Code A and B

Parameter: Dropout delay S1 [s]
Value can be set from 0.0 - 9.9
Increment 0.1 s
Depending on the physical state of the transistor output and the inversion by F2, a logical result is output.
If the logical result is 1, the logically further processable state (feedback) is passed on as 1, delayed by the time S1.
Otherwise, the state remains as is.

Code A and B

Parameter: Pick-up delay S2 [s] {breblowtimet}
Value can be set from 0.0 - 9.9
Increment 0.1 s
Depending on the physical state of the transistor output and the inversion by F2, a logical result is output.
If the logical result is 0, the logically further processable state (feedback) is passed on as 0, delayed by the time S2.
Otherwise, the state remains as is.

Code A and B

Parameter: Logic [function]
Value can be set to O, U, S
Result = physical state of the transistor output before the function F1.
O - OR operation of all available and active (value entry 0.LEX=1) inputs and active (0.LAX=1) outputs (feedback)

U - AND operation of all available and active (value entry 0.LEX=1) inputs and active (0.LAX=1) outputs (feedback)

S - ACCUMULATION operation of all available and active (value entry 0.LEX=1) inputs and active (0.LAX=1) outputs (feedback)
AND operation to switch off
OR operation to switch on again

Code A and B

Parameter: Input E2 [function]
Value can be set to 0 or 1
0 - Input switched to inactive (not considered in the logic)
1 - Input switched to active (considered in the logic)

Code A and B

Parameter: Input E3 [function]
Value can be set to 0 or 1
0 - Input switched to inactive (not considered in the logic)
1 - Input switched to active (considered in the logic)

Code A and B

Parameter: Input A0 [function]
Value can be set to 0 or 1
0 - Input switched to inactive (not considered in the logic)
1 - Input switched to active (considered in the logic)

Code A and B

Parameter: Input A1 [function]
Value can be set to 0 or 1
0 - Input switched to inactive (not considered in the logic)
1 - Input switched to active (considered in the logic)

Code A and B

Parameter Input A3 [function]
Value can be set to 0 or 1
0 - Input switched to inactive (not considered in the logic)
1 - Input switched to active (considered in the logic)

4.11 Setting the amplitude

After power ON, the display switches to the root display Amplitude.
Starting from this, you can change to level 3 via key 6 (8 x press) .

The afterblowtime is set in level 3, that means the valve blows, after switching off the actuator, by the set time.

Code A and B

Parameter afterblowtime S1 [s]
Value can be set to 0.0 - 9.9
Increment 0.1s

4.12 Amplitude adjust

After power ON, the display changes to the root display Amplitude.

Press key 4 to switch to the programming mode. A dot appears in LED 2 from the left. The amplitude can be changed immediately without entering a CODE.
Set the desired voltage value and save the result with key 5. SAVE appears briefly.

1 - 115/230 V~

Sollte die Sollwertvorgabe nicht auf F stehen, sondern der Wert U, I, P eingestellt sein, ist eine Änderung der Spannung nicht möglich, obwohl der Punkt für den Programmiermodus angezeigt wird!

4.13 Set up vibratory conveyors safely

Zuerst müssen folgende Anschlusswerte des Schwingförderers festgestellt werden:

Maximal zulässige Spannung [V~]
Maximal zulässige Stromaufnahme [A~]
Betriebsfrequenz [Hz] der eingesetzten Wechselstromschwingmagnete

Anhand der festgestellten Werte müssen jetzt die zulässigen Arbeitsgrenzen **ohne** den angeschlossenen Förderantrieb eingestellt werden (Schwingamplitude 30...80V~).

Start in der Root-Anzeige Amplitude

1 - 115/230V~

Stellen Sie den Wert auf die maximal zulässige Spannung des eingesetzten Wechselstrom-Schwingmagnetes des Förderers ein, indem Sie zuerst in den Programmiermodus wechseln (siehe Bedienfeld und Bedienercode).

danach wechseln zum nächsten Menüpunkt Strombegrenzung

0,1 - 6,0A~

hier stellen Sie den maximal zulässigen Gesamtstrom des Förderers ein.

Weiter muss nun festgelegt werden, ob in Voll- oder Halbwellenbetrieb gearbeitet werden soll. Beim Halbwellenbetrieb wird die eingestellte Frequenz automatisch halbiert, der Gesamtstrom wird dadurch steigen. Aus diesem Grund ist es sinnvoll die Strombegrenzung korrekt einzustellen, da ansonsten die Magnete des Förderers beschädigt werden können.

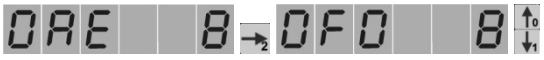

G or H

Nachdem die Arbeitsgrenzen und die Wellenform eingestellt sind, sollte zwischengespeichert werden.

Als nächstes wird nun die optimale Arbeitsfrequenz des Förderers ermittelt, gehen Sie hierzu zurück zum Menüpunkt 0F

5,0 - 200 Hz

Ausgehend von der festgestellten Betriebsfrequenz der Magnete sollte nun diese eingestellt und gespeichert werden.
Schalten Sie nun das Gerät AUS und schließen den Förderer an.

Schalten Sie das Gerät wieder EIN und gehen erneut zum Menüpunkt 0F.

Es wird nun die Resonanzfrequenz des Förderers ermittelt.
Die eingestellte Amplitude sollte dabei im Bereich 30 - 80V~ eingestellt sein, da in der Resonanzfrequenz bei zu

hoch eingestellter Amplitude es zum Anschlagen des Antriebs kommen kann.
Die Resonanzfrequenz stellt sich ein bei maximaler Schwingamplitude und minimalem Ausgangsstrom. Der Strom kann entweder über die eigene Stromanzeige des Gerätes abgelesen werden oder man verwendet ein externes Dreheiseninstrument.

Um einen stabilen Förderbetrieb zu erhalten, muss ein Abstand von der ermittelten Resonanzfrequenz (ca. 1...2Hz) eingestellt werden (bevorzugt Resonanzfrequenz + 1...2Hz).
Dieser Frequenzabstand muss vom Anlageneinrichter bestimmt werden, da bei unterschiedlichen Antrieben unterschiedliche Verhältnisse herrschen.

Da die Fördergeschwindigkeit außerhalb der Resonanzfrequenz sich verringert, kann über die Amplitude die Fördergeschwindigkeit jetzt wieder erhöht werden. Zur Kontrolle ob der Förderer anschlägt, sollte die Amplitude bis zur Begrenzung getestet werden.

Falls der Förderer anschlägt muss die Begrenzung der Amplitude entsprechend verringert werden, andernfalls sind keine Änderungen notwendig.

Weitere Einstellungen wie Sanftanlauf, Sanftauslauf und Verzögerungszeiten usw. sind anlagenspezifisch einzustellen

4.14 Setting up the enable/sensor input

Connect the enable/sensor input directly to the socket on the housing; use a matching mating connector for this:

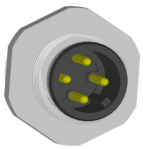 X21	<u>Connection for enable input E1</u> Pin 1 - 24V= Pin 2 - Not Connected Pin 3 - GND Pin 4 - Enable input (menu: E1)
 X22	<u>Sensor input connection E2+E3</u> Pin 1 - +24 V= Pin 2 - Sensor input 2 (menu: E3) Pin 3 - GND Pin 4 - Sensor input 1 (menu: E2) The +24V= supply is isolated from the 230V~ mains voltage.

Parameterize the menu item F1 on levels 1 - 3 with the desired function value via the control panel by changing to programming mode in menu item F1 first (see control panel and operator code):

Start in "Amplitude" root display

Parameter: F1 [function]
Value can be set to O, S

O - Applied HI signal is not inverted and is further processed as logical 1.
Applied LO signal is not inverted and is further processed as logical 0.

S - Applied HI signal is inverted and is further processed as logical 0.
Applied LO signal is inverted and is further processed as logical 1.

If F1 is set to O on level 0 and E2 is switched to active, the output (vibratory conveyor) is switched off with logical 1 and switched on with logical 0.
Inversion of the sensor input!

If F1 is set to O in level 1, all outputs are switched off with logical 1 and enabled with logical 0.
Inversion of the control input!

After changing the value, do not forget to save!

4.15 Factory settings / read/save user backup

Via the control panel, activate the menu item 0old on level 0. Change to programming mode (see the control panel and operator code):

Start in "Amplitude" root display

To load the factory settings, select the menu item "re". Proceed analogously to saving.
Your operator code-specific parameters will be reset to the factory settings.

To restore your backed-up data, select the menu item "br". Proceed analogously to saving.
Your operator code-specific parameters will be loaded.

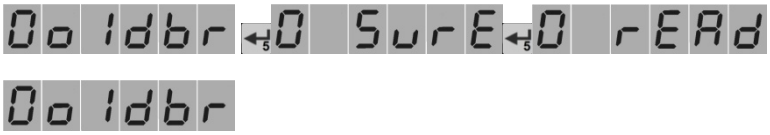

To back up your settings, select the menu item "bs" and press the 5 key. The security query "sure" appears. Press the 5 key again to save. "Save" appears and immediately the selected parameter again.
Your operator code-specific parameters will be backed up.

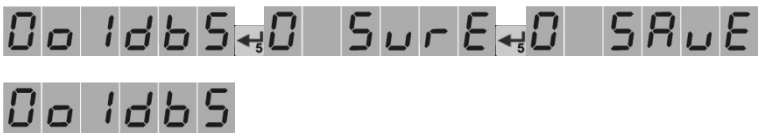

4.16 Setting up external setpoint specification

Connect the external setpoint to the available connection terminal on the control board via the available bore:

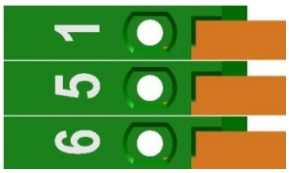	Terminal 6 - +5 V= analogous for external potentiometer Terminal 5 - Voltage input 0-10 V= or external potentiometer or current input 4-20 mA= Terminal 1 - GND analog for current input voltage input external potentiometer

Use the jumpers on the control board to select the type of external setpoint:

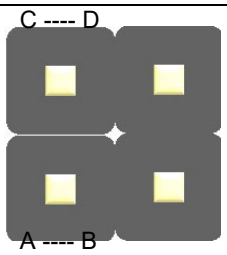	Bridge between C-D -> 4-20 mA= Bridge between A-B -> 0-10 V = or Potentiometer

Parameterize the menu item AE on level 0 with the desired setpoint value via the control panel by changing to programming mode in menu item AE first (see control panel and operator code):

Start in "Amplitude" root display

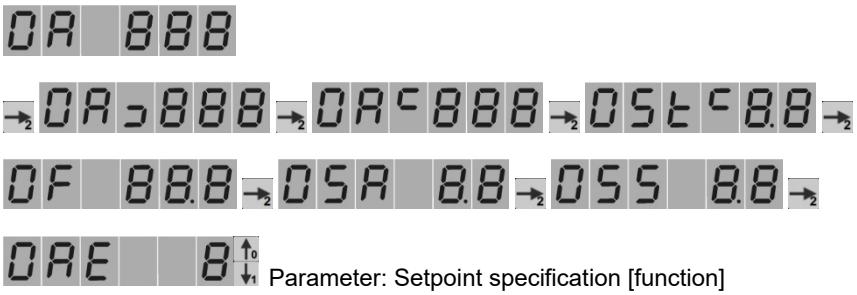

Parameter: Setpoint specification [function]

Value can be set to F, I, P, U, b
F - Setpoint specified via membrane keypad
I Setpoint specified via analog current 4 - 20mA=
P - Setpoint specified via potentiometer 10K
U - Setpoint specified via analog voltage 0 - 10 V=
b - Setpoint specified via acceleration sensor

After changing the value, do not forget to save!

4.17 Connecting status/valve output

There are two 24V= transistor outputs available for control tasks. Connect them to the available connection sockets, depending on the application. Use a matching mating connector for this.

 X23	<u>Status output connection T1 (b-coded)</u> Pin 1 - Not Connected Pin 2 - Not Connected Pin 3 - GND Pin 4 - Output (menu: A1)
 X24	<u>Vibration sensor connection + valve output T2</u> Pin 1 - +24 V= Pin 2 - Valve output (menu: A2) Pin 3 - GND Pin 4 - Vibration amplitude input The +24V= supply is isolated from the 230V~ mains voltage.

Program the required control-related parameters on LEVEL 1 - 2:

Transistor switches depending on input 2 and its delay times
-> 1.LE2 =1
(Parallel connection to drive, if drive is also switched via E2, status output of vibratory conveyor)

Transistor switches depending on output 0 and its delay times
-> 1.LA0 =1
Inversion and delay times for this must be set under 0.F2;0.S1; 0.S2.
(Delayed switching with respect to and depending on drive, delayed blast air)

Other logical operations are also possible with the inputs E2, A0 - A2.

Applies to outputs 1. to 2.

In the case of complex control tasks, please contact your supplier.

5 Readjustment with acceleration sensor

For regular operation, an acceleration sensor mounted to the vibratory conveyor is required. A supply voltage of +24V= is available. Sensors with an analog voltage output up to 6 V~ or analog current output up to 20 mA= can be connected. Ideally, an acceleration sensor (U) with a resolution of 0.3 V/g or (I) with a resolution of 0.8 mA/g should be used.

In regular operation with sensor feedback, all vibrations measured by the sensor are processed in the control circuit. External vibrations caused by neighboring machines, the unstable standing of the conveyor or unstable installation of the acceleration sensor can result in faulty control behavior.

5.1 Mounting the acceleration sensor

The acceleration sensor (BS5 here) should report the movement and acceleration value of the conveyor back to the control circuit of the control device. It is therefore very important that no additional secondary vibrations are measured which are caused by unfavorable sensor installation.

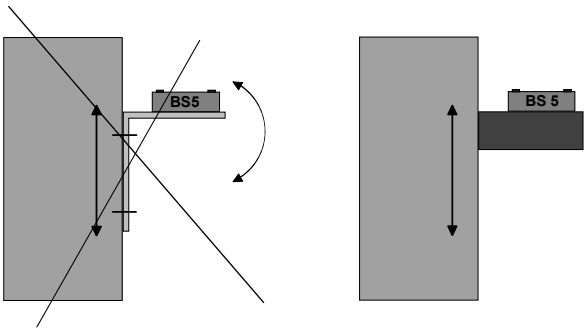

The sensor should ideally be mounted in the direction of vibration at the same inclination as the springs of the conveyor on a massive mounting block, which does not generate any natural vibrations.

In regular operation, the magnitude of the output signal directly determines the maximum vibration amplitude of the conveyor.

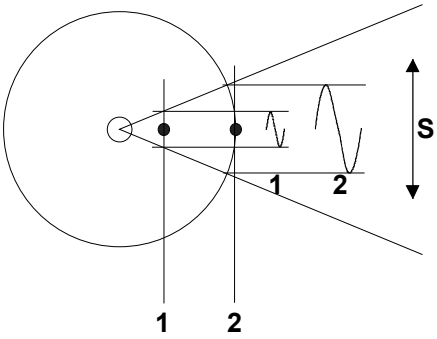

In the case of circular conveyors, it makes sense to mount as far as possible on the outer diameter, so that a vibration path as great as possible is measured. If the sensor signal is too small, the control range of the nominal value is greatly restricted.

S = vibration path

Mounting point 1 = small vibration amplitude
Mounting point 2 = large vibration amplitude

Example with circular conveyor

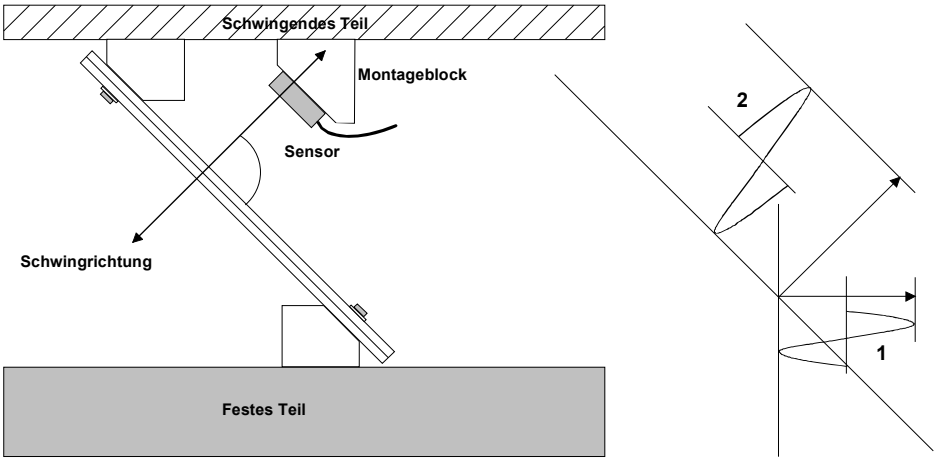

Example with linear conveyor

1. Small amplitude when mounted vertically

2. Greater amplitude when mounted at the same angle of inclination as the springs

The control device and the sensor fastened to the conveyor form a closed control circuit, whereby the signal provided by the sensor has a decisive influence on the control range of the nominal value, i.e., the controller controls the conveyor such that the actual value (conveying capacity or vibration intensity) corresponds to the specified nominal value (ideally: taught nominal value = displayed actual value).

The sensor measures the current acceleration of the conveyor. A sinusoidal output voltage or a normalized output current of the sensor results. The acceleration increases with increasing vibration frequency. At high frequencies and small vibration amplitudes, the sensor output signal can be greater than for small frequencies and larger vibration amplitudes.

Due to the very different acceleration values of the various conveyors, there can be great differences in the returned signals under certain circumstances. When mounting the sensor, it must be made sure that an actual value between 8.00 - 9.99 g is reached in normal operation.

5.2 Connecting the acceleration sensor

Connect the acceleration sensor to the available socket on the housing. Use a matching screw connection or mating connector for this:

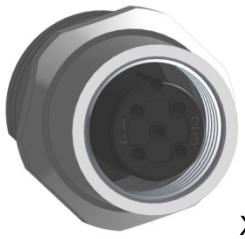 X24	Pin 1 - +24 V= Pin 2 - Valve output (menu: A2) Pin 3 - GND Pin 4 - U (sensor output)

5.3 Parameters for the control circuit on LEVEL 0

Code B
Visible after code input

Parameter: Acceleration sensor selection
Value can be set to 0, U, I
0 - No acceleration sensor connected
U - Acceleration sensor connected to voltage output
I - Acceleration sensor connected to current output

If a sensor type is activated, the menu for the setpoint specification is supplemented with menu item b. Setpoint specification for acceleration sensor.

Code B
Visible after code input, increment 0.1 g

Parameter: min. acceleration limit [g]
Value can be set to 0.0 - 20.0
Lower value in readjustment range

Code B
Visible after code input, increment 0.1 g

Parameter: max. acceleration limit [g]
Value can be set to 0.0 - 20.0
Upper value in readjustment range

Code B
Visible after code input, increment 0.1

Control parameter: Proportional component (closed-loop gain)
Value can be set to 0.1 - 19.9
Default 5.0

Code A and B

Parameter: Nominal acceleration [g]
Value can be set from 0.0 - 20.0
Increment 0.1 g

5.4 Procedure for controlling startup

- Mount an acceleration sensor on the drive.
- Connect acceleration sensor to FS 26.
- POWER on
- Set nominal acceleration parameter 0t to 0.00.
- Set optimal run via frequency 0F and amplitude 0A.
- Increase amplitude to just before knocking operation.
- Read off acceleration [g] under menu item db.

- Program parameter 0t< with read-off value.
- Leave parameter 0t> at 0.00 for maximum control range.
- Reset amplitude for optimum running.
- Teach parameter nominal acceleration 0t (press 0 and 1 keys simultaneously). The current g value is accepted.
- Set nominal value specification parameter 0AE to b. Control active. The vibration amplitude is kept constant.
- If the system should start to vibrate, it can be attempted to calm down the system using the parameter 0rP.

5.5 Technical data of acceleration sensor

Acceleration sensor	M12 socket, 4-pin +24V= / max. 50 mA Voltage output level: 0-6 V~ = 0.01-20.0 g

6 Technical data

Mains connection, wide range	95 - 250 V~	
Output voltage ranges	Automatic switching between 1 - 230 V~ and 1 - 115 V~	
Mains frequency	50 Hz	60 Hz
Variable output frequency	5.0 - 200 Hz	
Output current	0.1 - 6 A~	
Protection class	IP 54 for suspended mounting (screw connections point to the floor)	
Fuse	6.3 A F	
Mains connection, mechanical	2 m with molded Schuko angle plug	
Mains connection, loop	STAKEI20 (active independent of power switch)	
Vibratory conveyor connection	HA3-BS series, 4-pin in axial sleeve housing	
Input E1	M12 plug, 4-pin +24V= / max. 50 mA / PNP Switching level HI: 6 - 24V=- Switching level LO: 0 - 4 V=	
Input E2+E3	M12 socket, 4-pin +24V= / max. 50 mA / PNP Switching level HI: 6 - 24V=- Switching level LO: 0 - 4 V=	
Status output T1	M12 socket, 4-pin 24V= / 100 mA max.	
Valve output T2	M12 socket, 4-pin, b-coded 24V= / 200 mA max.	
Acceleration sensor	Connection to M12 socket, 4-pin, b-coded +24V= / max. 50 mA	
Output stabilization	Max. voltage change of 1V~	
Housing	Aluminum base plate + aluminum extruded section + plastic cover	
Dimensions	237 x 100 x 184mm	
Operating temperature	0...40° C	
Storage temperature	-10...+80° C	
Installation height	1000 m, 0.5% nominal current reduction per additional 100 m	

For drives with a current consumption less than 80 mA, the output voltage is currently not displayed correctly. Currently, for a set output voltage of 230 V~, a voltage of max. 180 V~ is output.

6.1 Setting values via keypad

Parameter			Delivery state
Vibratory conveyor, level 0			
Vibration amplitude	0A	1...230 V~	30 V~
Min. control limit	0A>	1...230 V~	30 V~
Max. control limit	0A<	1...230 V~	230 V~
Current limit	0St	0.1...10 A~	6 A~
Vibration frequency	0F	5.0...200Hz	50.0 Hz
Soft start ramp	0SA	0.1...5 seconds	0.5 second
Soft stop ramp	0SS	0.1...5 seconds	0.5 second
Nominal value selection	0AE	F - Keypad P - External potentiometer U - Voltage 0 .. 10 V DC I - Current 4 .. 20 mA b - Acceleration sensor	F
Wave form	0FO	^^^^^ (G) full-wave or ^ ^ ^ (H) half-wave	G
Lower acceleration limit	0t>	0.0 - 20.0	0.0
Upper acceleration limit	0t<	0.0 - 20.0	20.0
Proportional factor, control	0rP	0.1 - 19.9	5.0
Working mode	0d	0 - Off 1 - Continuous operation E - Control	S
Backups	0old	0 - Work parameters br - Read backup bs - Save backup re - Factory settings	0
Nominal control value for acceleration sensor	0t	0.0 - 20.0	0.0

The max. control limit automatically adapts itself to the active output voltage range and is then also saved.When changing to the high range, the limit must be adjusted upward manually. (Safety)

Control level 1			
Invert input	1F1	PNP (O) PNP inverted (S)	O
Debouncing time	1S	0.1...99.9 ms	0.1 ms
Control level 2			
Invert input	2F1	PNP (O) PNP inverted (S)	O
Pick-up delay	2S1	0.0...9.9 s	2.0 s
Dropout delay	2S2	0.0...9.9 s	2.0 s
Debouncing time	2S	0.1...99.9 ms	0.1 ms
Control level 3			
Invert input	3F1	PNP (O) PNP inverted (S)	O
Pick-up delay	3S1	0.0...9.9 s	0.0 s
Dropout delay	3S2	0.0...9.9 s	0.0 s
Debouncing time	3S	0.1...99.9 ms	0.1 ms
Logic level 0.			
Invert output	0.F1	Not inverted (O) Inverted (S)	O
Invert logical state of output	0.F2	Not inverted (O) Inverted (S)	O
Pick-up delay	0.S1	0.0...9.9 s	0.0 s
Dropout delay	0.S2	0.0...9.9 s	0.0 s
Logic operation	0.L	O - OR U - AND S - ACCUMULATION	O
For input which can be activated with logic	0.LE1	Inactive (0) / active (1)	1
For input which can be activated with logic	0.LE2	Inactive (0) / active (1)	1
For input which can be activated with logic	0.LE3	Inactive (0) / active (1)	0
For input which can be activated with logic	0.LA1	Inactive (0) / active (1)	0
For input which can be activated with logic	0.LA2	Inactive (0) / active (1)	1
For input which can be activated with logic	0.LA3	Inactive (0) / active (1)	0
Logic level 1.			
Invert output	1.F1	Not inverted (O) Inverted (S)	O
Invert logical state of output	1.F2	Not inverted (O) Inverted (S)	O
Pick-up delay	1.S1	0.0...9.9 s	0.0 s
Dropout delay	1.S2	0.0...9.9 s	0.0 s
Logic operation	1.L	O - OR U - AND S - ACCUMULATION	O
For input which can be activated with logic	1.LE1	Inactive (0) / active (1)	0
For input which can be activated with logic	1.LE2	Inactive (0) / active (1)	0
For input which can be activated with logic	1.LE3	Inactive (0) / active (1)	0
For input which can be activated with logic	1.LA0	Inactive (0) / active (1)	1
For input which can be activated with logic	1.LA2	Inactive (0) / active (1)	0
For input which can be activated with logic	1.LA3	Inactive (0) / active (1)	0
Logic level 2.			
Invert output	2.F1	Not inverted (O) Inverted (S)	O
Invert logical state of output	2.F2	Not inverted (O) Inverted (S)	O
Anzugsverzögerung	2.S1	0.0...9.9 s	0.0 s
Vorblaszeit	2.S2	0.0...9.9 s	1.0 s

Logic operation	2.L	O - OR U - AND S - ACCUMULATION	O
For input which can be activated with logic	2.LE1	Inactive (0) / active (1)	0
For input which can be activated with logic	2.LE2	Inactive (0) / active (1)	0
For input which can be activated with logic	2.LE3	Inactive (0) / active (1)	0
For input which can be activated with logic	2.LA0	Inactive (0) / active (1)	0
For input which can be activated with logic	2.LA1	Inactive (0) / active (1)	0
For input which can be activated with logic	2.LA3	Inactive (0) / active (1)	1
Logic level 3.			
Afterblowtime	3.S1	0.0...9.9 s	3.0 s

7 Error list

Danger: Life-threatening danger due to electric current! Only have repairs to the 230V power network performed by a qualified professional.

Problem/error	Possible cause(s)	Remedy
Device does not work	• Power failure or defective fuse • The 230V mains socket is defective. • The device is defective. • Control input inverted	➢ Check the fuses. ➢ Have the mains socket repaired by qualified, skilled personnel. ➢ Have the device checked by a qualified professional. ➢ Check whether the control input is correctly set
Vibratory conveyor is not working	• Incorrect vibration frequency set • Mains frequency incorrect • Umax too low	➢ Have the vibration frequency compared with the data of the vibration magnet by qualified, skilled personnel. ➢ Have the mains frequency compared with the data of the vibration magnet by qualified, skilled personnel. ➢ Check the Umax setting
Vibratory conveyor vibrates too strongly, magnet knocks	• Umax too high • Incorrect vibration frequency set	➢ Check the Umax setting ➢ Have the vibration frequency compared with the data of the vibration magnet by qualified, skilled personnel.
Magnet gets hot	• Magnet is operated at impermissible voltage • Magnet is operated at impermissible frequency	➢ Have the voltage checked by qualified, skilled personnel. ➢ Have the frequency checked by qualified, skilled personnel.
Control input does not work	• Control voltage is not in correct range • Control input deactivated	➢ Have the voltage checked by qualified, skilled personnel. ➢ Check the settings
Important: Malfunctions might occur in an unfavorable electromagnetic environment.		

Caution: Danger due to improper interventions. Do not manipulate the device. Otherwise, this can result in function failures and device defects.

7.1 Error messages / ERROR

If the complete display is flashing, an error occurred.
The error code can be queried on level d under the parameter Err.

The following error codes are possible:

Connected acceleration sensor is defective or not connected (in regular operation only)

Overload shutdown, output power exceeded, e.g., incorrect frequency setting or air gap too wide

Critical temperature exceeded on the power output stage

Mains voltage lies outside of the standard voltage ranges 90-130 V~ and 190-250 V~

Nominal control value cannot be reached

Short-circuit shutdown (defective magnet, ground fault, defective cable)

Data loss in the EEPROM

Processor communication error

Special error:

Keypad query error

In the case of frequently occurring error messages not described in this section, please contact the manufacturer.

8 Maintenance and cleaning

The control device works maintenance-free.
The safety inspection in acc. with DIN VDE 0701-0702 is to be performed annually.

Pull out the mains plug before cleaning the housing of the device with liquids.

9 Disposal

The control device must not be disposed of in the normal household waste.

Users are obligated to drop off old devices at a disposal point for old electrical and electronic devices. The separate collection and proper disposal of your old devices helps to conserve natural resources and ensures recycling, which protects human health and the environment. Information about where you can find disposal points for your old devices can be obtained from your city administration or local waste disposal facility.

10 CE conformity

The control device FS26 is marked with the CE marking and therefore meets the relevant European directives.
The company fimotec-fischer GmbH & Co. KG herewith confirms that this device meets the following directives:

- EN 61000-6-4 and EN 61000-6-2 in acc. with
- EU directive 2014/30/EU "Electromagnetic compatibility"

The declaration of conformity is archived at the manufacturer.

11 Service

If you have any questions or problems, please contact the supplier directly.
Manufacturer hotline for fimotec-fischer GmbH & Co.KG: Tel.: 0049-7424-884-0

Note

Please keep the following information ready, since otherwise service cannot be provided:
- Your company with address
- Your name and contact data, such as telephone number and e-mail address
- Complete designation of the device
- Serial number (FBxx-xxxx-xx or HW20xxxx)
- The direct supplier of your device or machine in which the device is integrated.

11.1 Operator codes

The following codes are available:

Without code	Operator
.000	System operator (code A)
.0231	System setter (code B)

It is up to the system supplier to pass on the operator codes or to reserve them for his service personnel. Via the system setter operator code, parameters are enabled which may only be changed by skilled, trained personnel, since the function and limit values of the conveyor devices are influenced with these settings.

12 Accessories (not included in the scope of delivery)

Designation	Use	Article number
Oscillation amplitude sensor	SWS-02 for control device FS-26	90.1130.04
Mounting bracket	for vibration amplitude sensor	98.1130.00
Connection cable	VK10-3M/VZ/HFA	91.4301.00
Connection cable	VK10-1.5M/VZ/HFA	91.4301.20
Connection cable	VK10-5M/VZ/HFA	91.4301.10
Sleeve housing	for X11, drive on FS-xx	91.2130.20
Screw connection	for X11, drive on FS-xx	91.2130.50
Pin insert	for X11, drive on FS-xx	91.2130.60
Cable plug	for X10, 230V output	91.3300.20
Cable socket M12A	for X21, disable/enable input	91.3211.01
Power plug M12A	for X22, filling level sensor input	91.3311.01
Power plug M12A	for X24, 24V sorting air valve	91.3311.01
Power plug M12B	for X23, status relay output	91.3311.05
Connection cable	Filling level M8-3p, 3m straight St. M12	91.4214.00
Connection cable	Filling level M8-3p, 3m angled St. M12	91.4214.01
Connection cable	Filling level M8-3p, 5m straight St. M12	91.4214.02
Connection cable	Filling level M8-3p, 5m angled St. M12	91.4214.03
Connection cable	Filling level M8-4p, 3m straight St. M12	91.4214.04
Connection cable	Filling level M8-4p, 3m angled St. M12	91.4214.05
Connection cable	Filling level M8-4p, 5m straight St. M12	91.4214.06
Connection cable	Filling level M8-4p, 5m angled St. M12	91.4214.07
Connection cable	Filling level M12, 3m straight St. M12	91.4214.08
Connection cable	Filling level M12, 3m angled St. M12	91.4214.09
Connection cable	Filling level M12, 5m straight St. M12	91.4214.10
Connection cable	Filling level M12, 5m angled St. M12	91.4214.11
Connection cable	Disable betw. control devices 0.4 m	91.4214.90
Connection cable	Disable betw. control devices 3.0 m	91.4214.91
Connection cable	Disable betw. control devices 5.0 m	91.4214.92